SSRG International Journal of Electrical and Electronics Engineering
ISSN: 2348-8379/ https://doi.org/10.14445/23488379/IJEEE-V13I11P104

Volume 13 Issue 11, 53-68, November 2026
© 2026 Seventh Sense Research Group®

Review Article

Technological Evolution of Power Converter Topologies and Control Methodologies for Light Electric Vehicle Battery Chargers with Single-Phase AC Supply

Ashish P. Patel[1], Dattesh Y. Joshi[2]

[1]*Power Electronics Engineering Department, VGEC, Chandkheda, Ahmedabad, Gujarat, INDIA.*
[2]*Electrical Engineering Department, KPGU, Vadodara, Gujarat, INDIA.*

[1]*Corresponding Author: ashish21881@gmail.com*

Received: 26 August 2026 Revised: 30 October 2026 Accepted: 31 October 2026 Published: 25 November 2026

Abstract *- The rapid growth of Light Electric Vehicles (LEVs) like e-bikes, e-rickshaws, and low speed two or three wheelers, has pushed a noticeable change in the way people think about On-Board Battery Charger (OBC) architectures. Moving from older ideas to high-efficiency, high power density converters that can run from a single-phase AC supply, while still meeting strict grid rules and safety requirements, is basically right in the middle of that shift. This article looks closely at the power converter scene for LEVs over the last few years, and it also points out how the industry has been moving away from the classic diode bridge rectifiers toward bridgeless designs and resonant topologies. The study looks into how power converters work and also what limits their design can have, in both non-isolated and isolated arrangements. There's special focus on adding Wide Bandgap (WBG) semiconductors, particularly Gallium Nitride (GaN) and Silicon Carbide (SiC), which have basically made it possible to hit efficiency numbers above 98%, like very consistently. Also, the article digs into current trends in control strategies, smart Vehicle to Grid (V2G) integration, and even the standardization of charging interface types. By pulling together performance metrics and pointing out new research gaps, the paper ends up acting as a technical benchmark for people working on transportation electrification, researchers and engineers alike.*

Keywords *- Light Electric Vehicles (LEVs), Single-Phase AC supply, Power Factor Correction (PFC), Bridgeless converters, Gallium Nitride (GaN), Silicon Carbide (SiC), Battery Management Systems (BMS), Vehicle-to-Grid (V2G).*

1. Introduction to LEV Charging

Decarbonization and emission reduction are the key priorities for the global urban mobility transformation, with metropolitan areas taking the lead. As one of the most important parts of this shift, Light Electric Vehicles (LEVs) such as e-scooters, e-bikes and low-speed utility vehicles have been shown to be a more energy-efficient and cost-effective alternative to their Internal Combustion Engine (ICE) peers [1-3].

The main concern of EV is the battery charger, which is nothing but a combination of ac-dc converter works as input stage and dc-dc converter works as output stage. The growth of LEVs depends upon the creation of a comprehensive, effective and easy-to-use charging infrastructure. While high-performance passenger cars tend to be operated by three-phase high-power charging, LEVs are generally powered by On-Board Battery Chargers (OBCs) that are connected to low-power single-phase AC supplies, typically 230 V at 50/60 Hz [4-7]. LEV chargers have increasingly sophisticated technical requirements in the current times. The modern systems require high power density and compact form factors with the power factor near to unity in order to reduce strain on residential power grids [8-10].

The on-board nature of these chargers implies that weight and space are at a premium, pushing the industry toward high-frequency operation and more advanced thermal management solutions. Furthermore, the evolution of battery chemistries, like the shift toward high energy density Lithium-ion (Li-ion) packs, asks that chargers implement Constant Current/Constant Voltage (CC/CV) charging profiles to ensure longer battery life and safety [11-13].

The technological development of last few years indicates the change from traditional hard-switched silicon-based converters to soft-switched topologies based on WBG materials. Silicon Carbide (SiC) and Gallium Nitride (GaN) have transformed the field of LEVs by offering higher breakdown voltages, superior thermal conductivity and drastically reduced switching losses. The design of chargers with efficiencies up to 98% has become possible with these

This is an open access article under the CC BY-NC-ND license (http://creativecommons.org/licenses/by-nc-nd/4.0/)

advancements, which in turn meet the performance targets defined by global energy departments [14-18]. This paper is a comprehensive review which gives the comparison of past and present topologies and will serve as a guideline for the design and implementation of next-generation LEV charging solutions.

2. System Requirements and Standardized Frameworks

There are some specific requirements on the vehicle side and on the grid side, and the architecture of an LEV charging system is determined by these requirements. To design a converter that meets both requirements, one must be knowledgeable about the power levels, voltage ranges, and safety protocols.

2.1. Charging Levels and Modes

Standardization bodies, like the Society of Automotive Engineers (SAE) and the International Electrotechnical Commission (IEC), have established clear classifications for AC charging. For LEVs, Level-1 and Level-2 AC charging are the primary modes of operation. Level-1 charging utilizes a 120 V AC supply (common in North America), providing between 1.44 kW and 1.92 kW, whereas Level-2 charging utilizes 208-240 V AC, allowing for higher power levels up to 19.2 kW, although most LEV OBCs are limited to the 1-6 kW range due to on-board space and thermal limits. The charging levels, modes and related parameters are shown in Table 1.

The transition between these levels depends on the refinement of the Electric Vehicle Service Equipment (EVSE) and the vehicle's internal power converter. LEVs often operate at the lower end of these spectrums, with 48 V, 72 V, and 96 V battery packs being common for two- and three-wheelers, necessitating a wide output voltage range for the OBC.

2.2. Power Quality and Grid Compliance

A typical design requirement for any grid-tied converter is the minimization of line-side harmonics. LEV chargers, when operating as non-linear loads, can introduce odd-order harmonics into the utility system, resulting in voltage distortion and transformer overheating.

IEC 61000-3-2 is the ultimate international standard for equipment with input currents ≤ 16A per phase, specifying strict limits for harmonic current components up to the 40th order [19].

The standard classifies equipment into four categories: Class A (balanced three-phase, household appliances), Class B (portable tools), Class C (lighting), and Class D (personal computers, TV receivers, and chargers between 75 W and 600 W).

Most LEV chargers covered under Class A or Class D depending on their power rating and specific wave shape characteristics. The maximum permissible current for LEV chargers according to its category and corresponding harmonic order is shown in Table 2. To comply with these limits, it is required to integrate active Power Factor Correction (PFC) stages in converters. Recent research has focused on maintaining Total Harmonic Distortion (THD) below 5% and achieving a Displacement Power Factor (DPF) near unity, which can be achieved through high-frequency switching and advanced Pulse Width Modulation (PWM) techniques.

Table 1. Charging levels and modes for single-phase chargers [20, 21]

Charging Category	Voltage Range (V)	Phase	Max Current (A)	Max Power (kW)	Typical Use Case
AC Level 1	120 V	1	12-16 A	1.4-1.9 kW	Household outlet, overnight slow charging
AC Level 2	208-240 V	1	24-80 A	Up to 19.2 kW	Dedicated home/public EVSE, semi-fast charging
IEC Mode 1	250 V (1Φ)	1/3	≤ 16 A	~3.7 kW	Legacy charging for e-bikes/basic LEVs
IEC Mode 2	250 V (1Φ)	1/3	≤ 32 A	~7.4 kW	Portable charging with in-cable protection
IEC Mode 3	250 V (1Φ)	1/3	≤ 63 A	Up to 43.5 kW	Standard public AC charging stations

2.3. Safety and Galvanic Isolation

Safety is of prime importance in EV charging applications, as far as user protection from the high-voltage AC mains is concerned. Galvanic isolation, usually provided by a High-Frequency Transformer (HFT), ensures that there is no direct electrical path between the input AC supply and the output DC battery terminals. This isolation also plays a key role in Electromagnetic Interference (EMI) suppression; preventing common-mode noise propagating from the high-frequency switching stages back to the grid.

An international safety standard such as IEC 61851-1 specifies general requirements for conductive charging systems, including protection against electric shock, insulation resistance, and dielectric strength.

Furthermore, communication between the vehicle and the EVSE, enabled by the Control Pilot (CP) signal, ensures that charging only commences when a secure physical connection is established, and the vehicle is ready to accept power.

3. Single-Phase Converter Topologies

In this section, the single-phase single-stage and single-phase two-stage power converter topologies, along with basic classification, are explained

Table 2. Harmonic order and corresponding current limit [19]

Harmonic Order (n)	Class A Max Permissible Current (A)	Class D Max Permissible Current (mA/W)
2	1.08	-
3	2.30	3.4
5	1.4	1.9
7	0.77	1.0
9	0.40	0.5
11	0.33	0.35
13	0.21	0.296
Odd ($15 \leq n \leq 39$)	$0.15 \cdot 8/n$	$3.85/n$

3.1. Classification

Single-phase LEV battery chargers are classified based on their architectural complexity, power flow capability, and the presence of isolation [22]. The selection of a specific topology is a trade-off between efficiency, component count, and cost.

3.1.1. Non-Isolated vs. Isolated Converters

Non-isolated converters are simpler and more compact, making them attractive for low-power accessory chargers. Typical examples are the standard Boost PFC, Cuk, SEPIC, and Zeta converters. As they are not isolated, they cannot be used in the primary on-board chargers due to safety regulations.

Isolated converters, on the other side, utilize a transformer to provide safety and voltage scaling. Isolated architectures include Flyback, Forward, Half-Bridge, and Full-Bridge configurations, which are often coupled with resonant tanks to achieve high efficiency [22-24].

3.1.2. Single-Stage vs. Two-Stage Architectures

The two-stage architecture is the industrial standard for LEV chargers. Figure 1 shows the block diagram of two-stage charger. The first stage performs AC-DC rectification and PFC, while the second stage provides isolation and regulates the DC output for battery charging.

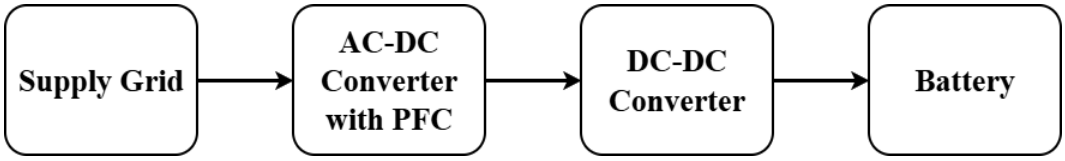

Fig. 1 Block diagram of two-stage charger

A large electrolytic DC-link capacitor is placed between the stages to buffer the power difference between the pulsating AC input and the steady DC output. Although reliable, these capacitors are bulky and have a limited operational lifespan, which has led to research into link-less or small-capacitor designs [25, 26]. Single-stage converters consist of the PFC and isolation functions into a single power conversion step. These topologies, like single-stage LLC or bridgeless isolated SEPIC, due to having lower number of switches and absence of DC-link capacitor, increase power density [23-28]. Single-stage converters face challenges in handling the 100/120 Hz power ripple requires complex control algorithms to manage the PFC and output regulation. However, it maintains high efficiency across a wide load range.

3.1.3. Unidirectional vs. Bidirectional Capability

Unidirectional chargers are designed to transfer energy from the grid to the vehicle and have a lower level of complexity along with low component count. Bidirectional chargers like Dual Active Bridge (DAB) and CLLC resonant converter are used to enable discharge of battery back to the grid (V2G) or power local loads (V2H/V2L) [29-33]. As smart grid technologies evolve, bidirectional capability is becoming a standard requirement for next-generation LEV platforms, mainly those used in fleet and delivery services [31].

3.2. Single-Phase Single-Stage Converters

Key architectural, topological, and control strategies in on-board Electric Vehicle (EV) battery chargers, focusing on transitioning from two-stage systems to highly efficient, power-dense single-stage topologies is covered in this section. The mitigation of power quality issues - particularly power factor correction, total harmonic distortion, high-frequency transformers or multi-stage isolation set-ups are the major challenge. A novel non-isolated single-stage modified SEPIC converter operating under a Unidirectional Current Control (UCC) scheme, achieving a high voltage gain with low dv/dt stress and compliance with IEEE-519 standards [34]. A 3.7-kW non-isolated single-stage cascade buck-boost charger is demonstrated with the elimination of isolated transformer stage to reach a 97.6% peak efficiency and near-unity power factor across broad input/output voltage ranges [35]. A single-

stage high step-down bi-folding converter with synchronous rectification and active ripple mitigation is designed, which achieves zero current switching and reduces THD below 4.52% for low-voltage battery applications.

Also industry-wide push toward non-isolated, single-stage EV charger designs that maximize efficiency and power density while strictly adhering to grid-side power quality standards [36].

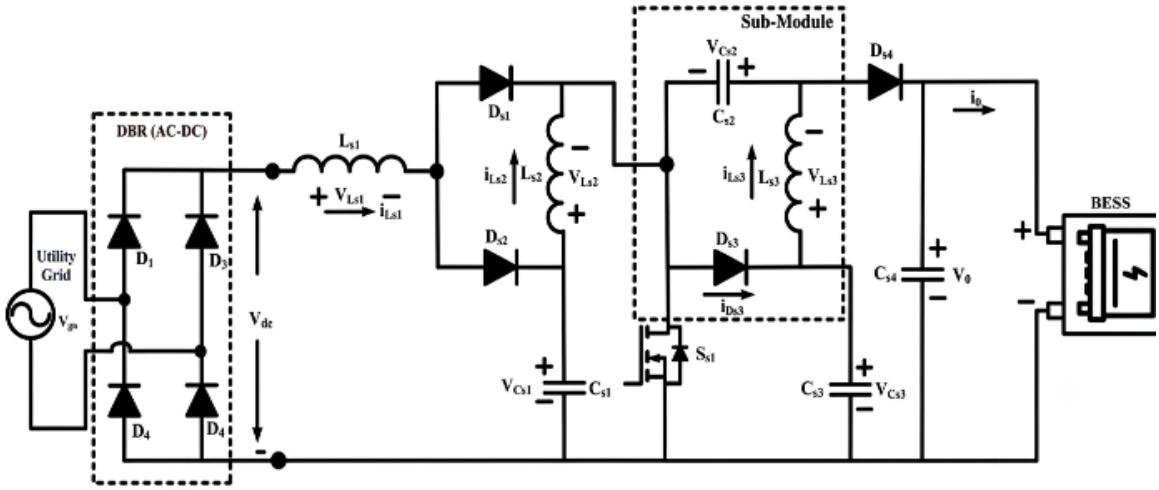

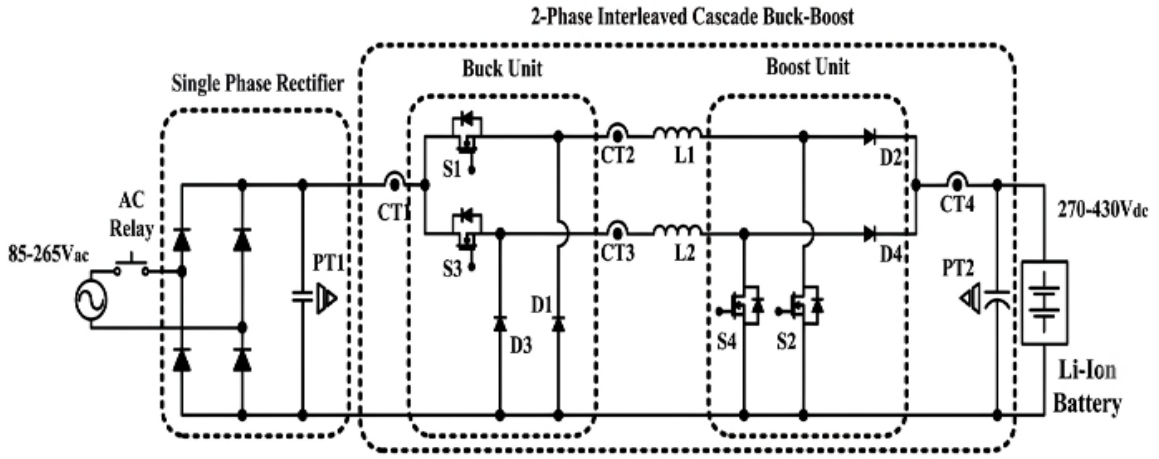

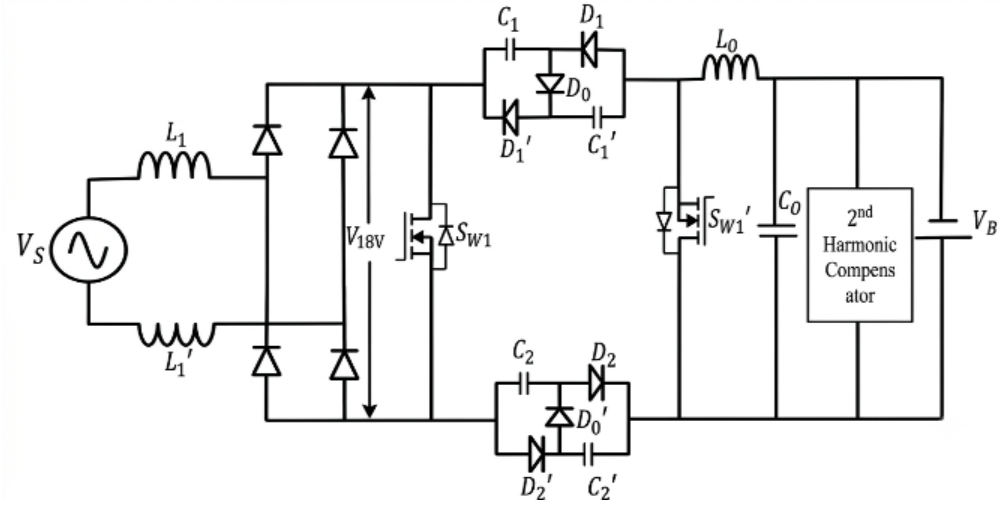

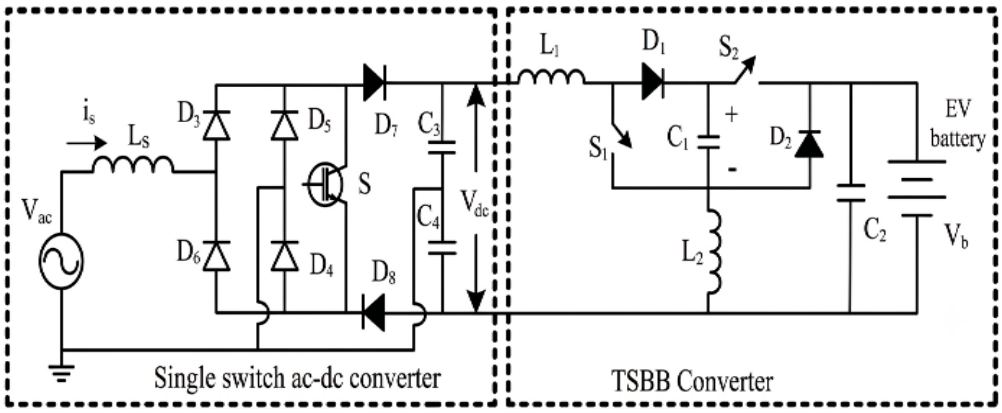
Single switch ac-dc converter
TSBB Converter
EV battery

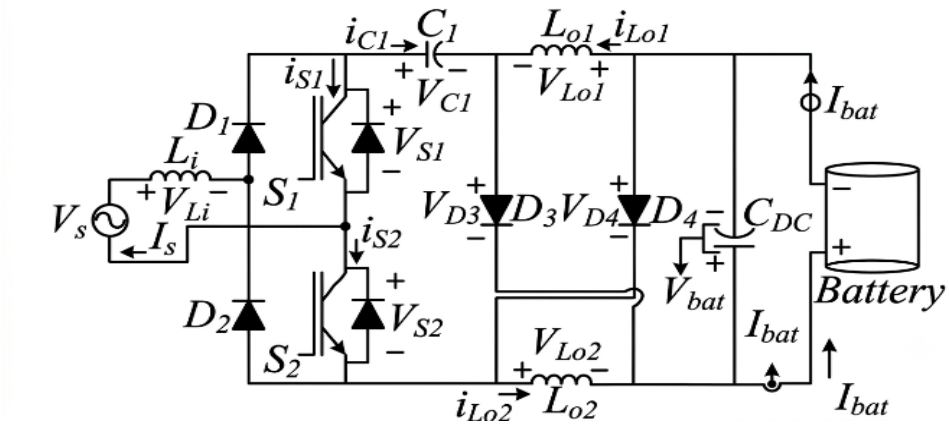
Battery

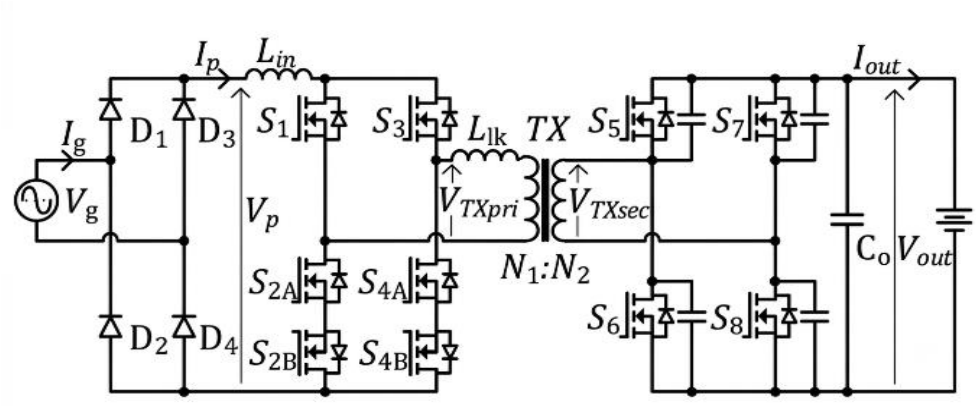

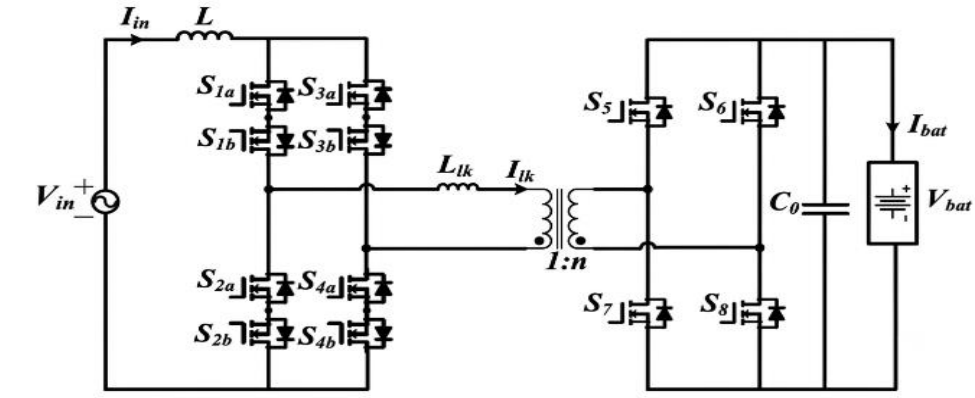

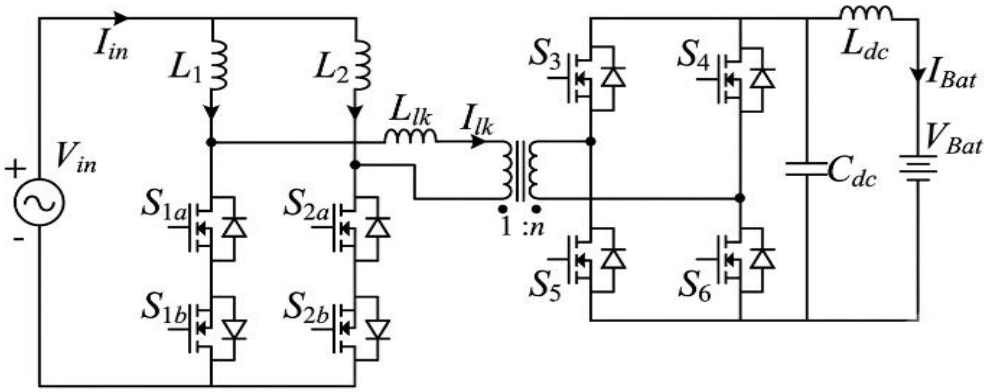

Fig. 2 Single-Phase single-stage isolated and non-isolated converter topologies [34-41]

Recent advancements in electric vehicle charging infrastructure emphasize on single-stage isolated power factor correction topologies to eliminate bulky intermediate DC-link capacitors, improve power density, and increase overall efficiency.

An isolated single-stage current source asymmetrical secondary modulated AC-DC converter that operates at a constant 50 kHz switching frequency without external clamp or snubber circuits is proposed. It utilizes a simple phase-shift modulation scheme to minimize circulating energy. A 3 kW SiC-based experimental prototype has achieved a peak efficiency of 96.4%, maintaining efficiency above 95% with a total harmonic distortion of 4.1% during constant power charging [37].

To address bidirectional Vehicle-to-Grid (V2G) and grid-to-vehicle capabilities, a zero-current assisted soft-switching single-stage PFC converter operating at 100 kHz is introduced. This architecture employs a current-fed full-bridge with AC-side bidirectional switches coupled via a high-frequency transformer to a DC-side full-bridge. It enables zero-current switching on the AC side and zero-current turn-on on the DC side without active clamping or passive snubber networks. The system was assessed in an experimental setup of 1.5 kW power, with a power density of 52.63 W/in3, and it was shown that the system has flexible active and reactive power control in four operating modes and suppressing the line current harmonics [38].

Together, these developments highlight the shift toward snubber-less, high-frequency, current-fed single-stage topologies as reliable, compact, and highly efficient solutions for modern EV charging applications [39-41].

Modern EV On-Board Chargers (OBCs) historically suffered from high switching/conduction losses, large low-frequency voltage ripples, severe current harmonics, and bulky electrolytic DC-link capacitors that degraded overall system reliability and power density [42].

Table 3. Comparison of single-phase single-stage non-isolated converters

Reference	**34**	**35**	**36**	**37**
Power Rating in Kw	-	3.7	1.25	3.2
I/P voltage Volts	108-110	120-240	230	120-230
Control	UCC	Active PWM	HCC	-
%THD	2.11	-	4.25	4.54
% Efficiency	95	97.6	92	96.4
PF	0.99	0.99	-	-
Switching Frequency kHz	100	-	-	20
No. of Diodes	8	8	10	4
No. of Power Switches	1	4	6	10
No. of Inductors	3	2	4	2
No. of Capacitors	4	2	3	5

Table 4. Comparison of single-phase single-stage isolated converters

Reference	**39**	**40**	**41**	**42**
Power Rating in Kw	3	1.5	1.5	0.8
I/P voltage Volts	207-253	120	120	85-220
Control	SOGI PLL	PRC	PCGPR-RB	PLLPRC
%THD	4.1	2.55	2.5	4.5

% Efficiency	95.4	96.7	96.5	96.5
PF	-	0.99	-	-
Switching Frequency kHz	50	100	100	20
No. of Diodes	4	0	0	1
No. of Power Switches	10	12	8	3
No. of Inductors	2	2	4	2
No. of Capacitors	5	1	1	2

Single-phase single-stage isolated and non-isolated converter topologies are shown in Figure 2. Tables 3 and 4 show a comparison of various single-stage converters considering various parameters.

3.3. Single-Phase Two-Stage Converters

Single-stage topologies effectively maximize power density, component reliability, and operational efficiency by eliminating bulky electrolytic DC-link capacitors and leveraging soft-switching techniques (ZVS/ZCS). However, two-stage architectures offer simple, decoupled control across stages for standard low-power applications at the cost of higher component counts and intermediate energy storage stages.

Interleaved boost PFC front end with buck-based CC-CV charging stage is realistic front-end architecture of a two-stage charger for low-power applications. It emphasizes on power-quality improvement, low THD and stable battery charging. The purpose of interleaving is to minimize input current ripple and device stress, and the CC-CV control makes the charger more associated with lithium-ion battery requirements [43]. The grid-to-vehicle charger using a Totem Pole-type front-end concept, followed by a buck converter, dual-loop PI control for achieving unity power factor and low harmonic distortion is proposed, which directly addresses grid-side power quality, which is a major issue in EV chargers. The practical control strategy and the demonstration that the converter can maintain in-phase grid voltage and current during G2V operation [9].

A power factor correction pre-regulation stage based on the Luo topology with interleaving and an isolated flyback converter to enhance the power factor, input ripple, reduce the switching stress in the pre-regulation stage and enable CC-CV battery charging. Low THD and near unity power factor have been reported in the experimental validation at 200 W. The front-end PFC and downstream charging behaviour are handled in an integrated way in the topology, which is closer to a real EV charger implementation [44].

A bridgeless modified boost PFC converter for EV battery charging which directly addresses the well-known drawbacks of traditional DBR-fed chargers such as high input current THD, poor source power factor, and high reactive power demand by eliminating the diode bridge and using a dual-half-cycle boost structure operated in CCM or DCM hybrid modes with PI control under single loop control The input inductors are designed for CCM, which helps to minimize current ripple and stabilize the source waveform, the output inductors are designed for DCM in each half-cycle, which helps to reduce component size and achieve high power density.

The intermediate DC-link is connected to the battery through an isolated flyback stage with SOC-based CC-CV charging, which provides a complete solution from grid to battery. The PSIM simulation at 7.5 kW and actual testing of a 200 W prototype demonstrate sinusoidal, in-phase source voltage and current, with input current THD being reduced to 2.5-3.1%, well within the IEC 61000-3-2 limits and significantly lower than for a traditional DBR charger [8]. Single-phase two-stage converter topologies are shown in Figure 3.

Advancing power factor correction, system efficiency and minimizing system footprint via advanced topology and control design are noted in the literature for electric vehicle charging architectures. One of the key focus areas is on the comparison of single-stage and conventional multi-stage converter architectures. The comparison of single-stage and two-stage converter is carried out parametrically, and it is presented in Table 5. The selection of an optimal charger topology involves a comprehensive evaluation of performance indices, including efficiency, power density, THD, and cost.

Table 5. Parametric comparison of single-stage and two-stage converters

Parameter	Two-Stage Converter	Single-Stage Converter
Efficiency (1-3 kW)	94-97%	94-97% (high eff. designs)
PF	0.92-0.98	0.99+
Current ripple	Low	More compared to TSC
Control complexity	Two control loops, easier to tune	Single loop, more complex
Device stress	Lower per-stage stress	Higher voltage/ current stress
Size & power density	Lower	Higher (fewer stages, compact)
Suitability for LEVs	OBCs (≥2-3 kW)	1-3 kW LEVs

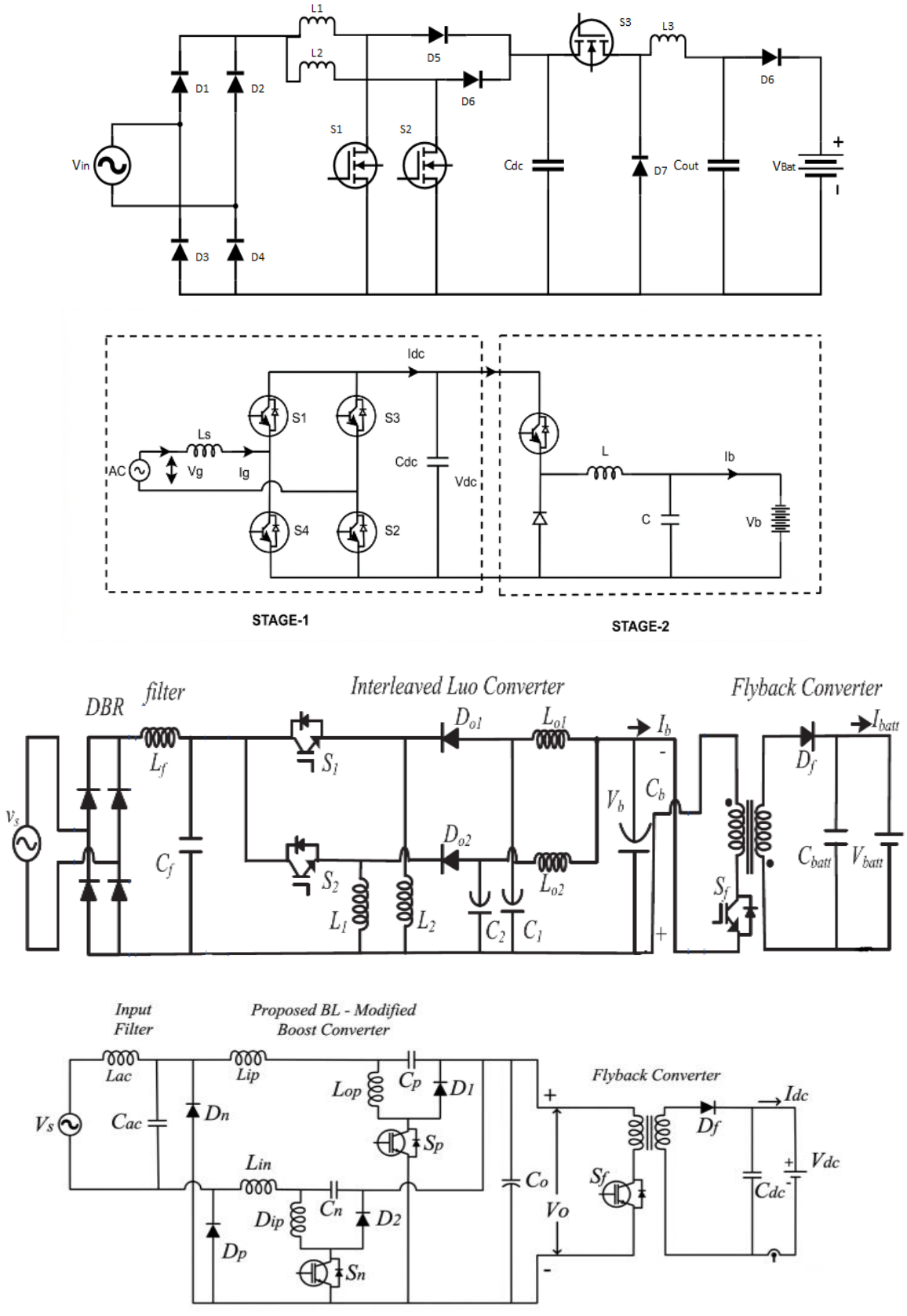

Fig. 3 Single-Phase two-stage converter topologies [8, 9, 43, 44]

Table 6. Comparison of various recent topologies applied for obc lev [45, 46]

Topology	Non-Isolated Bridgeless PFC + Buck/Boost	Interleaved Boost PFC + Unidirectional LLC	Bridgeless Totem-Pole PFC + Bidirectional CLLC	Single-Stage Isolated Matrix / DAB Converter
Converter Stage Architecture	Single-Stage (Non-Isolated)	Two-Stage (Isolated)	Two-Stage (Isolated)	Single-Stage (Isolated)
WBG Technology	Silicon Superjunction / GaN	SiC MOSFET (PFC)	GaN HEMT (650V Pr. / 100V Sec.)	GaN / SiC Hybrid
Efficiency	96.5% - 97.5%	95.5% - 97.0%	98.2% - 98.8%	96.8% - 97.8%
Power Density	1.8 - 2.2 W/cm³	1.2 - 1.6 W/cm³	2.8 - 3.5 W/cm³	2.2 - 2.7 W/cm³
Device Count	Low	Medium	High	Moderate
Cost	Very Low	Moderate	High	Moderate
Primary Limitations	No galvanic isolation; higher EMI ground leakage current; safety constraints	Narrow ZVS range at light load; lower power density due to two distinct stages	Sensitive gate drive PCB layout (dv/dt); complex digital synchronization; higher BOM cost	High double-line frequency (2f) ripples on battery; coupled control loops under AC variations.
Target LEV Application	Ultra-light e-bikes, low-cost utility 2W (swappable battery pods with built-in BMS protection)	Standard Commercial e-scooters, commuter 2W (250 W - 1 kW)	High-performance 2W, fast-charging e-trikes, single-phase V2G-enabled platforms (1.5 kW - 3.3 kW)	Fleet e-rickshaws, modular urban delivery 3W (1 kW - 2 kW)

The fundamental difference between Single-stage and two-stage converters is system complexity, power density and efficiency in single-phase LEV charging applications. Two-stage chargers like bridgeless Totem-Pole PFC combined with resonant DC-DC converters achieve peak efficiencies of 98.2% - 98.8% and power densities of 2.8 - 3.5 W/cm³ when integrated with Gallium Nitride HEMTs. However, they results in higher component counts and the need of complex digital control technique arises. Single-stage non-isolated topologies eliminate intermediate high-voltage bulk storage capacitors and, in turn, reduce the cost as well as the size, but face severe double-line frequency power ripple management challenges and lack galvanic isolation.

In practical LEV applications, topology and wide-bandgap device selection are directly governed by vehicle power class, thermal environment, and cost sensitivity. Non-isolated single-stage Buck/Boost converters suit ultra-light e-bikes where Battery Management Systems (BMS) provide primary protection, whereas commercial 2-wheeler e-scooters rely on two-stage interleaved PFC with unidirectional LLC converters for cost-effective isolation. For high-performance 2-wheelers and single-phase Vehicle-to-Grid (V2G) systems, GaN-based bidirectional Totem-Pole CLLC topologies can be used for power density. Meanwhile, Silicon Carbide MOSFETs are preferred in high-power, naturally cooled 3-wheeler fleet chargers due to their superior thermal conductivity and gate-drive noise immunity. The Totem-Pole PFC combined with an LLC stage represents the state-of-the-art for high-end LEV chargers, particularly when implemented with SiC or GaN. However, for the extremely cost-sensitive e-rickshaw and two-wheeler markets in developing regions, the bridgeless isolated Zeta-Luo or modified Cuk converters are becoming increasingly popular due to their reduced component count and acceptable efficiency levels. A comparison of various recent topologies applied for OBC using WBG devices with their limitations and applicability is given in Table 6.

4. Control Methodologies

Control of power electronic converters in Light Electric Vehicle (LEV) battery chargers generally uses cascaded current/voltage loops, Power Factor Correction (PFC) algorithms, and increasingly advanced nonlinear or predictive control, with many recent designs exploiting discontinuous conduction modes and digital control to reduce sensors and improve efficiency.

LEV Charger Control

LEV chargers are usually single-phase medium power systems that interface a 230 V AC supply to low voltage battery packs via one or two conversion stages. Control design must simultaneously ensure high power factor and low total harmonic distortion at the grid side, accurate enforcement of battery charging profiles, and protection against overcurrent, overvoltage, and temperature variations [47, 48].

Main Control Objectives

For LEV chargers, the principal control objectives are:

- PFC current control that is aligned with the grid voltage, yielding unity or high power factor and low THD, typically at a level that complies with IEEE 519-type limits [49-51].

- Regulation of DC-link and battery voltage or current to implement Constant Current-Constant Voltage (CC-CV) or multistage profiles without excessive stress and ageing of Li-Ion packs [48].
- High efficiency and less number of components can be achieved through bridgeless topologies with discontinuous conduction operation, and more easier sensor requirements [49, 51-53].

The selection of the converter topology or the corresponding control architecture are driven by these goals [47].

4.1. AC-DC Front-End Converter Control

4.1.1. Classical PFC Control with PI or PR Loops

Many LEV chargers use a single-stage or front-end PFC rectifier in which the current can be controlled to follow a sinusoidal reference in phase with the supply voltage. An outer loop regulates the DC-link voltage [54]. In a conventional control structure, the inner current loop employs either a Proportional-Resonant (PR) controller in the stationary reference frame or a PI controller in the synchronous dq frame to eliminate steady-state error in sinusoidal currents. The outer voltage loop is typically regulated using a PI controller to keep the DC-link voltage at its desired constant level [54]. A totem-pole PFC converter incorporating an inner PR current control loop and an outer PI voltage control loop has been implemented for PV-based, grid-connected EV charging. The proposed control strategy enables the converter to draw a nearly sinusoidal grid current while providing satisfactory transient response during operating condition changes [54].

4.1.2. Discontinuous Conduction Mode based Control

Several recent LEV chargers intentionally operate the PFC stage in Discontinuous Inductor Current Mode (DICM) or DCM to simplify control and reduce sensor count [49, 51]. An isolated high-gain bridgeless AC-DC buck-boost converter for single-stage LEV battery charging is designed in DCM; this yields inherent zero-current switching for some devices, reduced magnetics size, and allows simple control using line voltage sensing and duty ratio modulation without complex current control loops [51]. A bridgeless isolated positive output Luo converter-based single-stage LEV charger similarly uses DICM, enabling a simple control scheme with few sensors and single gate drive circuitry, while still achieving high power factor over 85-265 V RMS input [49]. By removing the continuous current constraint, DCM/DICM designs can implement PFC and output regulation through relatively simple multiplier-based or duty cycle control laws, which is attractive for low cost LEVs [49, 51, 52].

4.1.3. Bridgeless and High Gain PFC Topologies

Bridgeless Cúk, Zeta, Luo, and semi-quadratic-gain converters are widely used to improve efficiency and power factor in single-phase LEV chargers [49, 52, 53]. An improved bridgeless Cuk converter-based LEV charger has been proposed to enhance input power quality and overall conversion efficiency. By eliminating the conventional input diode bridge, the bridgeless topology reduces conduction losses, while the integrated PFC control ensures proper shaping of the input current and improves the quality of grid-side current [52].

A modified bridgeless single-stage converter has been proposed for LEV battery charging to improve both conversion efficiency and input power factor. The converter employs suitable PFC current control to shape the grid current, together with output-voltage regulation to ensure stable and effective battery-charging operation [53]. In the proposed designs, control mainly combines an A-line voltage synchronized reference generator by using PLL or zero-cross detection [50]. The current controller regulates the inductor current by ensuring that it closely follows the desired sinusoidal reference waveform [54]. The duty cycle is modulated based on the current tracking error and the deviation of the DC-link voltage from its reference value.

4.2. DC-DC Converter Control for Battery Charging

The Battery Management System (BMS) ensures better battery charging profile through implementation of the DC-DC conversion stages [47]. In two-stage chargers, the DC-DC converter current is controlled to follow a reference generated by the BMS. The reference is generated based on State of Charge (SoC), usually through the PI current controller and PWM [48]. In single-stage LEV chargers employing isolated buck-boost or Luo converter topologies, Constant-Current (CC) and Constant-Voltage (CV) charging are achieved by switching between current and voltage regulation based on duty cycle control strategies. This mode transition is often supported by operating the converter in Discontinuous Conduction Mode (DCM), which facilitates effective regulation throughout the charging process [51, 55].

Advanced DC-DC converter topologies, including Double Star Modular Multilevel Converters (DS-MMCs) and Dual Active Bridge (DAB) converters, offer additional control capabilities for improving the performance of EV chargers. In DS-MMC-based chargers, proportional-resonant current control, cell-voltage balancing, sorting, and circulating-current control work together to keep the cell voltages balanced, maintain a near-unity power factor, and regulate the battery charging current. In grid-connected chargers using a DAB as the back-end converter, phase-shift control is commonly used to control the direction and amount of power transferred between the grid and battery, enabling effective battery-current regulation during both Grid-to-Vehicle (G2V) and Vehicle-to-Grid (V2G) operation [50, 54].

4.3. Advanced and Robust Control Techniques

Beyond conventional PI/PR and multiplier-based PFC, recent EV/LEV charger research explores several advanced control methods:

4.3.1. Synergetic Control of Multi-Stage Systems

A synergetic control strategy for a 20 kW isolated Vienna rectifier front-end EV charger coordinates the AC-DC and DC-DC stages to share DC-link voltage modulation and current shaping, enabling a "1/3-PWM" mode where only one bridge leg is actively modulated at any given time [13]. This approach reduces switching losses and improves efficiency while maintaining sinusoidal line currents and DC-link regulation [13]. Although demonstrated on higher-power EV chargers, the same synergistic concepts can be scaled to LEV chargers using Vienna or other multi-leg topologies.

4.3.2. Self-Tuning Filter (STF) based Control and Multifunctional Operation

Grid-integrated multifunctional EV chargers combine charging with active filtering and V2G support using STF-based control algorithms [50]. An AC/DC Voltage Source Converter (VSC) plus DAB DC-DC converter is controlled in three modes - G2V, V2G, and Active Filtering Mode (AFM) using STF derived current references that isolate fundamental components from distorted load currents [50].

STF provides better performance than traditional PLL or Second Order Generalized Integrator (SOGI) under unbalanced or distorted grid voltages, leading to THD < 5% in grid currents even while charging [50]. These ideas are relevant for LEV chargers integrated into smart distribution systems where chargers also act as active filters or ancillary service providers.

4.3.3. Model Predictive and Optimization based Control

Model Predictive Control (MPC) has been applied to multi-level bidirectional converters used in EV chargers to optimize switching decisions while meeting current and voltage constraints, and function optimization algorithms (e.g., Hunger Games Search) have been used to tune converter controllers for buck converters [56]. MPC allows direct inclusion of constraints such as current and voltage limits, switching frequency bounds, and dead time, offering better dynamic performance than classical PI designs. Metaheuristic optimization of controller parameters can improve transient response and efficiency of converter stages used in chargers [56].

4.3.4. Sliding Mode and Super-Twisting Control

Super Twisting Sliding Mode Control (STSMC) has been applied to EV ultra-fast chargers based on Vienna rectifier and interleaved buck converters to improve robustness against grid unbalance and parameter variations [56]. Traditional PI controllers are simple but may lack robustness under non-ideal grid conditions; STSMC can maintain precise current and voltage regulation with better disturbance rejection [56].

4.3.5 Typical Charging Profiles and BMS Interaction

Battery charging control is tightly coupled with the BMS, which determines SoC, temperature and health indicators and sends appropriate current/voltage set points to the charger [48]. The most common LEV battery charging profile is Constant Current/Constant Voltage (CCCV), where the charger maintains a fixed current until a target voltage is reached, then switches to voltage regulation with tapering current.

CC Mode: The current loop is active, and the switching frequency (in LLC) or duty cycle (in PWM converters) is adjusted to maintain a constant current as the battery voltage rises.

CV Mode: Once the battery reaches its target voltage, the voltage loop takes precedence, and the current is allowed to decay naturally until the charging process is terminated [48].

Alternative profiles include pulse charging and multistage constant current schemes (e.g., five-step charging), with the charger control loops switching among different current references based on SoC thresholds [48].

In two-stage architectures, the AC-DC stage is largely unaware of the battery details and simply maintains DC link voltage at a set level, while the DC-DC stage follows BMS commands; in single-stage LEV chargers, the unified control often combines input current shaping and battery current regulation in one algorithm [49, 51].

5. WBG Semiconductors: The Role of GaN and SiC

The most transformative development in LEV power electronics in recent time has been the commercialization and integration of WBG devices. Silicon Carbide (SiC) and Gallium Nitride (GaN) have effectively redefined the limits of power density and efficiency. SiC and GaN offer higher breakdown voltage, faster switching, lower losses, and better high-temperature capability than silicon; SiC is favored for high-voltage/high-power systems, while GaN excels in high-frequency, medium-voltage converters.

5.1. Gallium Nitride (GaN) in PFC Stages

GaN-on-Silicon HEMTs are ideally suited for high-frequency switching in the AC-DC PFC stage. Unlike silicon MOSFETs, GaN devices have zero reverse recovery charge (Qrr), which eliminates a major source of loss in hard-switched bridgeless topologies like the totem-pole PFC. This allows the switching frequency to be pushed into the 100-500 kHz range, enabling a 30-50% reduction in the size of the boost inductors and EMI filters [57]. Major manufacturers have demonstrated GaN-based chargers that achieve over 98% efficiency, a performance level that was practically impossible with silicon at high frequencies [58]. The high electron mobility of GaN also allows for smaller gate drive requirements and faster switching transitions, although this necessitates careful PCB layout to manage high dv/dt and di/dt rates.

5.2. Silicon Carbide (SiC) for High-Power Stages

Table 7. Material level comparison [59, 60]

Parameter	Silicon (Si)	Silicon Carbide (SiC)	Gallium Nitride (GaN)
Bandgap Energy (Eg)	1.1 eV	3.2 - 3.3 eV	3.4 eV
Critical Breakdown Field	0.3 MV/cm	3.0 MV/cm	3.3 MV/cm
Electron Mobility	1,400 $cm^2/V·s$	650-900 $cm^2/ V·s$	1,500-2,000 $cm^2/ V·s$
Switching Frequency (fsw)	20 kHz-50 kHz	50 kHz-300 kHz	300 kHz-5 MHz+
Peak System Efficiency	92%-96%	97%-99%	98%-99.5%
Switching Losses	Very High	Low	Extremely Low
Conduction Losses	Moderate	Low to Moderate	Lowest
Power Density	Baseline (0.5-2 W/cm^3)	High (5-15 W/cm^3)	Ultra-High (20-50 W/cm^3)
Typical Voltage Class	Up to several kV, but larger devices	600 V-10 kV, high current	Roughly 30-650 V commercially
Thermal Conductivity	150 W/m·K	330-490 W/ m·K	130 W/ m·K
Operating Junction Temp (Max)	150˚C	175˚C -200˚C +	150˚C -175˚C
Relative Cost (Die/System)	Low	Medium	High
Reliability Maturity	Highly Mature	Commercially mature	Mature for lower-voltage power

SiC MOSFETs are favored for high-power DC-DC stages and three-phase chargers due to their high breakdown voltage and exceptional thermal conductivity (nearly 3x that of Silicon). In LEV chargers rated for 3.3 kW to 6.6 kW, SiC devices enable higher efficiency in LLC and DAB stages by reducing both conduction and switching losses.

For example, replacing conventional silicon diodes with 650 V, 25 mΩ SiC MOSFETs, such as the C3M0025065K, in the LLC secondary rectifier can considerably improve converter efficiency, particularly when handling the high currents demanded by low-voltage LEV battery packs.

In addition, the higher junction-temperature capability of SiC devices, which can reach around 175°C-200°C, provides greater thermal headroom. This can help reduce the size and weight of the cooling system, ultimately contributing to a more compact and lightweight on-board charger. The material-level comparison based on various parameters is given in Table 7.

5.3. Impact of Switching Frequency on Density

The shift from 20 kHz toward frequencies above 100 kHz is the primary driver for power density improvements. High-frequency operation allows for the miniaturization of magnetic components, which typically occupy over 30% of the charger's volume. However, this comes at the cost of increased EMI and potential efficiency penalties due to higher core losses and gate drive power. The impact of switching frequency on different components is listed in Table 8.

5.4. Practical Limitations of WBG Semiconductors

Although the WBG devices offer high power and high frequency operation its implementation has some limitations also. The limitations are as follows.

5.4.1. Dynamic R_{DS} (on) and Current Collapse in GaN

GaN HEMTs can exhibit trapping effects after high-voltage switching, causing the effective RDS (on) to temporarily increase. This can raise conduction losses and produce device-to-device or operating-condition variability.

Table 8. Impact of switching frequency [61-64]

Parameter	20-40 kHz (Legacy)	100-500 kHz (Modern)
Inductor Size	Large	Small (Planar/Integrated)
EMI Filter	Bulky	Compact
Semiconductors	Si	GaN / SiC
Cooling Requirement	Active (Fans)	Often Passive (Heatsinks)
Power Density	< 1 kW/L	> 4 kW/L

5.4.2. EMI at High Switching Frequency

The very fast dv/dt and di/dt of WBG devices reduce switching losses but generate stronger electromagnetic interference. Parasitic inductances and capacitances can produce ringing, overshoot, and common-mode currents.

Careful PCB layout, shielding, filtering, and controlled gate drive become important.

5.4.3. Gate-Drive Design Challenges

WBG devices generally have tighter gate-voltage requirements and much faster switching edges. The gate driver

must have low propagation delay, low inductance, suitable source/sink current, and good immunity to high dv/dt. Inadequate gate control can cause false turn-on, excessive ringing, or even device failure.

Table 9. Parameters for gate-drivers

Parameter	Si MOSFET	SiC MOSFET	GaN HEMT
Typical V_{GS}	3 to 5 V	1.5 to 3.5 V	1.2 to 1.7 V
Abs. Max. V_{GS}	±20 V	-8 to +22 V	-5 to +6.5 V
Recommended Drive	0V/10 to 15 V	-4V/15 to 18 V	0V/5 to 5.5 V
dv/dt Immunity	>20 V/ns	>100 V/ns	>150-200 V/ns

The typical parameters for gate-driver are given in the Table 9.

5.4.4. Reliability and Qualification Data

SiC and GaN have matured substantially, but long-term field data and qualification experience can still be less extensive than for mature silicon technologies. Reliability can also depend strongly on packaging, gate-drive conditions, temperature cycling, humidity, cosmic-ray effects in high-voltage SiC, and dynamic switching stresses.

6. Future Trends and Research Outlook

With the development in new technologies, several emerging trends are set to define the next phase of LEV charger development.

6.1. The Rise of NACS and Universal Interfaces

The North American Charging Standard (NACS), standardized under SAE J3400, specifies the physical, electrical, functional, safety, and performance requirements for conductive AC and DC charging through a common vehicle coupler. By providing a unified charging interface, the standard helps reduce the complexity of the vehicle connector and inlet arrangement. This can also lower the cost of the vehicle-side charging inlet and simplify the associated wiring harness, which is particularly beneficial for Lightweight Electric Vehicle (LEV) applications where minimizing size, weight, and cost is important [65].

6.2. Multi-Functional and Integrated Power Modules

The trend toward integrating multiple power conversion functions into a single system is gaining increasing attention. In this approach, the on-board charger can be integrated with the DC-DC converter, allowing common components to be shared between charging and propulsion functions. Architectures such as the Triple-Active Bridge (TAB) and Integrated DC-to-DC Conversion System (IDCS) can therefore reduce the size of magnetic components and lower the overall system cost, while also providing a more compact and integrated power train.

6.3. Smart Charging and Grid Interaction

The adoption of OCPP 2.1 and ISO 15118 is enabling LEVs to play a more active role in smart-grid applications. AI-based and optimization-driven charging strategies can help coordinate LEV charging schedules, reducing the risk of overloading local distribution networks. In addition, V2G technology, enabled by bidirectional power converters, allows LEVs to operate as mobile energy storage units. This capability can support the integration of renewable energy sources and provide backup power during grid outages or other emergency situations.

7. Conclusion

Recent developments in LEV battery-charging technology have focused strongly on improving both power density and overall efficiency. Conventional diode-bridge rectifiers are increasingly being replaced by bridgeless and resonant converter topologies, which help reduce conduction losses and overcome some of the limitations of traditional single-phase chargers. At the same time, the growing use of GaN and SiC power devices has enabled higher switching frequencies, allowing magnetic components and other passive elements to be made smaller and lighter. These advances are contributing to more compact, efficient, and lightweight on-board chargers for LEV applications. The research highlights the key importance of selecting the appropriate topology or its cost-effectiveness based on the specific power level and regional requirements of the LEV application. As we look toward the latter half of the decade, the convergence of charging standards around NACS and the integration of smart grid functionalities will further solidify the role of the LEV as a foundation of sustainable urban transportation. However, ongoing challenges in thermal management and multi-objective digital control continue to offer fertile ground for future academic and industrial research.

Conflict of Interest

"The author(s) declares that there is no conflict of interest regarding the publication of this paper."

References

[1] Mohammad Faisal Akhtar et al., "Recent Developments in DC-DC Converter Topologies for Light Electric Vehicle Charging: A Critical Review," *Applied Sciences*, vol. 13, no. 3, pp. 1-35, 2023. [CrossRef] [Google Scholar] [Publisher Link]

[2] Neha Singh, Abhishek Tomar, and Deep Sehgal, "High Efficiency Bidirectional Dual Active Bridge DC/DC Converter for Level 3 Electric Vehicle Charging," *Advances in Research*, vol. 26, no. 1, pp. 274-282, 2025. [CrossRef] [Google Scholar] [Publisher Link]

[3] Jitendra Gupta, and Bhim Singh, "An AC-DC Power Factor Corrected Converter for Light Electric Vehicle Battery Charging," *2021 IEEE Industry Applications Society Annual Meeting (IAS)*, Vancouver, BC, Canada, pp. 1-7, 2021. [CrossRef] [Google Scholar] [Publisher Link]

[4] Muhammad Shahid Mastoi et al., "An in-Depth Analysis of Electric Vehicle Charging Station Infrastructure, Policy Implications, and Future Trends," *Energy Reports*, vol. 8, pp. 11504-11529, 2022. [CrossRef] [Google Scholar] [Publisher Link]

[5] Salman Habib et al., "A Comparative Study of Electric Vehicles Concerning Charging Infrastructure and Power Levels," *2017 International Conference on Frontiers of Information Technology (FIT)*, Islamabad, Pakistan, pp. 327-332, 2017. [CrossRef] [Google Scholar] [Publisher Link]

[6] Pierpaolo Dini, Sergio Saponara, and Antonio Colicelli, "Overview on Battery Charging Systems for Electric Vehicles," *Electronics*, vol. 12, no. 20, pp. 1-36, 2023. [CrossRef] [Google Scholar] [Publisher Link]

[7] Yuanchao Wu et al., "An Integrated Charger of Wireless Power Transfer, Onboard Charger, and Auxiliary Power Module for Electric Vehicles," *IEEE Transactions on Power Electronics*, vol. 40, no. 4, pp. 6334-6344, 2025. [CrossRef] [Google Scholar] [Publisher Link]

[8] Prince Dadhaniya, Mukesh Maurya, and Gururaj Mirle Vishwanath "A Bridgeless Modified Boost Converter to Improve Power Factor in EV Battery Charging Applications," *IEEE Journal of Emerging and Selected Topics in Industrial Electronics*, vol. 5, no. 2, pp. 553-564, 2024. [CrossRef] [Google Scholar] [Publisher Link]

[9] Jyoshila Vinathi Adari et al., "Power Factor Correction (PFC) for EV Charger using PI Controller in G2V Application," *2025 International Conference on Sustainable Energy Technologies and Computational Intelligence (SETCOM)*, Gandhinagar, India, pp. 1-6, 2025. [CrossRef] [Google Scholar] [Publisher Link]

[10] B. Vaikundaselvan et al., "Power Factor Correction by Bridgeless Buck Boost Converter," *International Journal of Electrical Engineering and Technology (IJEET)*, vol. 11, no. 2, pp. 271-285, 2020. [Google Scholar]

[11] Mahwish Memon, and Claudio Rossi, "A Review of EV Adoption, Charging Standards, and Charging Infrastructure Growth in Europe and Italy," *Batteries*, vol. 11, no. 6, pp. 1-59, 2025. [CrossRef] [Google Scholar] [Publisher Link]

[12] K. Shobha Rani, and V. Nandagopal, "Comparative Analysis of zeta Converter and Conventional DC-DC Converter using Mother Optimized FOPID Controller in Electric Vehicles," *Electric Power Systems Research* vol. 252, 2026. [CrossRef] [Google Scholar] [Publisher Link]

[13] Duberney Murillo-Yarce et al., "A Systematic Method for Studying the use of DC/DC Converters with Three Discontinuous Conduction Modes as Automatic PFCs," *IEEE Transactions on Power Electronics*, vol. 39, no. 9, pp. 11318-11339, 2024. [CrossRef] [Google Scholar] [Publisher Link]

[14] Mingde Zhou, Liang Yu, and Haoyu Wang, "A SiC-based Highly Integrated Bidirectional AC/DC Converter for PEV Charging," *2021 IEEE 1st International Power Electronics and Application Symposium (PEAS)*, Shanghai, China, pp. 1-5, 2021. [CrossRef] [Google Scholar] [Publisher Link]

[15] Karatlapellysrinivas, Deepak Sai Duvvapu, and BarryVenugopal Reddy, "Flexible Mode Totem Pole PFC Rectifier using Sic-MOSFET," *2025 IEEE 4th International Conference on Smart Technologies for Power, Energy and Control (STPEC)*, pp. 1-5, 2025. [CrossRef] [Google Scholar] [Publisher Link]

[16] Binkai Wang, Shitong Wang, and Xinyan Yu, "Recent Advances in Bridge-Less Power Factor Correction Converter," *Highlights in Science, Engineering and Technology*, vol. 81, pp. 49-58, 2024. [CrossRef] [Publisher Link]

[17] Snehalika, Ranjeeta Patel, and Chinmoy Kumar Panigrahi, "GaN based Isolated Bidirectional Multiport DC-DC Converter for Electric Vehicle Charging," *e-Prime - Advances in Electrical Engineering, Electronics and Energy*, vol. 8, pp. 1-11, 2024. [CrossRef] [Google Scholar] [Publisher Link]

[18] Jaydeep Sanjay Kukde et al.," Improved Power Quality for On-Board EV Charger with a Cascaded Dual-Active Bridge Power Factor Correction Unit," *2023 9th IEEE India International Conference on Power Electronics (IICPE)*, SONIPAT, India, pp. 1-6, 2023. [CrossRef] [Google Scholar] [Publisher Link]

[19] IEC, IEC 61000-3-2: Electromagnetic Compatibility (EMC) - Limits - Limits for Harmonic Current Emissions, IEC, 2018. [Online]. Available: https://cdn.standards.iteh.ai/samples/22247/bdec75030c3c4f82af83aa4fb86bb1d8/IEC-61000-3-2-2018.pdf

[20] SAE International, J1772_201710 - SAE Electric Vehicle and Plug in Hybrid Electric Vehicle Conductive Charge Coupler, 2017. [Online]. Available: https://www.sae.org/standards/j1772_201710-sae-electric-vehicle-plug-hybrid-electric-vehicle-conductive-charge-coupler

[21] IEC, IEC 61851-1: Electric Vehicle Conductive Charging System - Part 1: General Requirements, 2023. [Online]. Available: https://webstore.iec.ch/en/publication/33644

[22] Bhim Singh et al., "A Review of Single-Phase Improved Power Quality AC-DC Converters," *IEEE Transactions on Industrial Electronics*, vol. 50, no. 5, pp. 962-981, 2003. [CrossRef] [Google Scholar] [Publisher Link]

[23] Sin-Woo Lee, and Hyun-Lark Do, "Isolated SEPIC DC-DC Converter with Ripple-Free Input Current and Lossless Snubber," *IEEE Transactions on Industrial Electronics*, vol. 65, no. 2, pp. 1254-1262, 2018. [CrossRef] [Google Scholar] [Publisher Link]

[24] Bhim Singh, and Radha Kushwaha, "A PFC-based EV Battery Charger using a Bridgeless Isolated SEPIC Converter," *IEEE Transactions on Industry Applications*, vol. 56, no. 1, pp. 477-487, 2020. [CrossRef] [Google Scholar] [Publisher Link]

[25] Chong-Eun Kim, Jae-Il Baek, and Jae-Bum Lee, "High-Efficiency Single-Stage LLC Resonant Converter for Wide-Input-Voltage Range," *IEEE Transactions on Power Electronics*, vol. 33, no. 9, pp. 7832-7840, 2018. [CrossRef] [Google Scholar] [Publisher Link]

[26] Wenbo Liu et al., "A Single Stage 1.65kW AC-DC LLC Converter with Power Factor Correction (PFC) for On-Board Charger (OBC) Application," *2020 IEEE Energy Conversion Congress and Exposition (ECCE)*, Detroit, MI, USA, pp. 4594-4601, 2020. [CrossRef] [Google Scholar] [Publisher Link]

[27] Aswin Dilip Kumar, Jitendra Gupta, and Bhim Singh, "A Bridgeless Modified Switched-Inductor SEPIC High Power Factor Rectifier with Extended Voltage Transfer Ratio for Low Voltage Battery Charging Applications," *IEEE Journal of Emerging and Selected Topics in Industrial Electronics*, vol. 5, no. 4, pp. 1644-1653, 2024. [CrossRef] [Google Scholar] [Publisher Link]

[28] Alakshyender Singh et al., "Design of Single-Stage Light Electric Vehicles Battery Charger based on Isolated Bridgeless Modified SEPIC Converter with Reduced Switch Stress," *IEEE Journal of Emerging and Selected Topics in Industrial Electronics*, vol. 6, no. 1, pp. 82-93, 2025. [CrossRef] [Google Scholar] [Publisher Link]

[29] Biao Zhao et al., "Overview of Dual-Active-Bridge Isolated Bidirectional DC-DC Converter for High-Frequency-Link Power-Conversion System," *IEEE Transactions on Power Electronics*, vol. 29, no. 8, pp. 4091-4106, 2014. [CrossRef] [Google Scholar] [Publisher Link]

[30] Liting Li et al., "Review of Dual-Active-Bridge Converters with Topological Modifications," *IEEE Transactions on Power Electronics*, vol. 38, no. 7, pp. 8050-8068, 2023. [CrossRef] [Google Scholar] [Publisher Link]

[31] Yu Yan et al., "Securing full-Power-Range Zero-Voltage Switching in Both Steady-State and Transient Operations for a Dual-Active-Bridge-based Bidirectional Electric Vehicle Charger," *IEEE Transactions on Power Electronics*, vol. 35, no. 7, pp. 7506-7519, 2020. [CrossRef] [Google Scholar] [Publisher Link]

[32] Zhengda Zhang et al., "High-Efficiency High-Power-Density CLLC Resonant Converter with Low-Stray-Capacitance and Well-Heat-Dissipated Planar Transformer for EV on-board Charger," *IEEE Transactions on Power Electronics*, vol. 35, no. 10, pp. 10831-10851, 2020. [CrossRef] [Google Scholar] [Publisher Link]

[33] Lie Zhao et al., "Design Methodology of Bidirectional Resonant CLLC Charger for Wide Voltage Range based on Parameter Equivalent and Time Domain Model," *IEEE Transactions on Power Electronics*, vol. 37, no. 10, pp. 12441-12453, 2022. [CrossRef] [Google Scholar] [Publisher Link]

[34] Ramu Vanapalli et al., "Design of Novel Non-Isolated Modified SEPIC Converter based Onboard PEV Charger," *2022 International Conference on Intelligent Controller and Computing for Smart Power (ICICCSP)*, Hyderabad, India, pp. 1-6, 2022. [CrossRef] [Google Scholar] [Publisher Link]

[35] Chang-Yeol Oh, "A High-Efficient Nonisolated Single-Stage On-Board," *IEEE Transactions on Power Electronics*, vol. 28, no. 12, pp. 5746-5757, 2013. [CrossRef] [Google Scholar] [Publisher Link]

[36] Bhavya Bansal, and Vishal Verma, "A New Single Stage AC-DC High Step-Down Bifolding Converter with Synchronous Rectification and 2nd Harmonic Mitigation for Onboard eV Chargers," *2022 IEEE 13th International Symposium on Power Electronics for Distributed Generation Systems (PEDG)*, Kiel, Germany, pp. 1-6, 2022. [CrossRef] [Google Scholar] [Publisher Link]

[37] Bussa Vinusha, R. Kalpana, and Dharavath Kishan, "Improved Power Quality of Single Phase On-Board Charger with Wide Voltage Conversion Range," *2023 IEEE IAS Global Conference on Renewable Energy and Hydrogen Technologies (GlobConHT)*, Male, Maldives, pp. 1-6, 2023. [CrossRef] [Google Scholar] [Publisher Link]

[38] Jitendra Gupta, Radha Kushwaha, Bhim Singh, "Improved Power Quality Transformerless Single-Stage Bridgeless Converter based Charger for Light Electric Vehicles," *IEEE Transactions on Power Electronics*, vol. 36, no. 7, pp. 7716-7724, 2021. [CrossRef] [Google Scholar] [Publisher Link]

[39] Denys Zinchenko et al., "High-Efficiency Single-Stage On-Board Charger for Electrical Vehicles," *IEEE Transactions on Vehicular Technology*, vol. 70, no. 12, pp. 12581-12592, 2021. [CrossRef] [Google Scholar] [Publisher Link]

[40] Nil Patel et al., "A Soft-Switched Single-Stage Single-Phase PFC Converter for Bidirectional Plug-In EV Charger," *IEEE Transactions on Industry Applications*, vol. 59, no. 4, pp. 5123-5135, 2023. [CrossRef] [Google Scholar] [Publisher Link]

[41] Udupi R. Prasanna, Anant Kumar Singh, and Kaushik Rajashekara, "Novel Bidirectional Single-phase Single-Stage Isolated AC-DC Converter with PFC for Charging of Electric Vehicles," IEEE Transactions on Transportation Electrification, vol. 3, no. 3, pp. 536-544, 2017. [CrossRef] [Google Scholar] [Publisher Link]

[42] Anjanee Kumar Mishra, and Taehyung Kim, "An Economical Light Plug-in Electric Vehicle (LPEV) with On-Board Single-Stage Battery Charging System," *IEEE Transactions on Industry Applications*, vol. 59, no. 2, pp. 6568-6579, 2023. [CrossRef] [Google Scholar] [Publisher Link]

[43] Chavank Goval, Daksh Pruthi, and Vanjari Venkata Ramana, "Charging of Electric Vehicle for Low-Power Applications with Improved Power Factor Correction," *2024 IEEE Third International Conference on Power Electronics, Intelligent Control and Energy Systems (ICPEICES)*, Delhi, India pp. 19-24, 2024. [CrossRef] [Google Scholar] [Publisher Link]

[44] Bhim Singh, and Radha Kushwaha, "Power Factor Preregulation in Interleaved Luo Converter-Fed Electric Vehicle Battery Charger," *IEEE Transactions on Industry Applications*, vol. 57, no. 3, pp. 2870-2882, 2021. [CrossRef] [Google Scholar] [Publisher Link]

[45] Radha Kushwaha, and Bhim Singh, "Bridgeless Isolated Zeta-Luo Converter-based EV Charger with PF Preregulation," *IEEE Transactions on Industry Applications*, vol. 57, no. 1, pp. 628-636, 2021. [CrossRef] [Google Scholar] [Publisher Link]

[46] Radha Kushwaha, Bhim Singh, and Vinod Khadkikar, "An Isolated Bridgeless Cuk–SEPIC Converter-Fed Electric Vehicle Charger," *IEEE Transactions on Industry Applications*, vol. 58, no. 2, pp. 2512-2526, 2022. [CrossRef] [Google Scholar] [Publisher Link]

[47] Md Safayatulla et al., "A Comprehensive Review of Power Converter Topologies and Control Methods for Electric Vehicle Fast Charging Applications," *IEEE Access*, vol. 10, pp. 40753-40793, 2022. [CrossRef] [Google Scholar] [Publisher Link]

[48] Marco Pasetti, Salvatore Dello Iacono, and Dario Zaninelli, "Real-Time State of Charge Estimation of Light Electric Vehicles based on Active Power Consumption," *IEEE Access*, vol. 11, pp. 110995-110010, 2023. [CrossRef] [Google Scholar] [Publisher Link]

[49] Jitendra Gupta, and Bhim Singh, "Bridgeless Isolated Positive Output Luo Converter based High Power Factor Single Stage Charging Solution for Light Electric Vehicles," *2020 IEEE 5th International Conference on Computing Communication and Automation (ICCCA)*, Greater Noida, India, pp. 51-56, 2022. [CrossRef] [Google Scholar] [Publisher Link]

[50] Rajesh Kumar Lenka, Anup Kumar Panda, and Laxmidhar Senapati, "Grid Integrated Multifunctional EV Charging Infrastructure with Improved Power Quality," *Journal of Energy Storage*, vol. 76, 2024. [CrossRef] [Google Scholar] [Publisher Link]

[51] Alakshyender Singh, Jitendra Gupta, and Bhim Singh, "Isolated Power Factor Corrected High-Gain AC-DC Buck-Boost Converter-based Single-Stage LEV Battery Charger," *IEEE Transactions on Industry Applications*, vol. 60, no. 3, pp. 3989-4000, 2024. [CrossRef] [Google Scholar] [Publisher Link]

[52] Bhim Singh, and Radha Kushwaha, "A High Power Quality Battery Charger for Light Electric Vehicle based on Improved BL Cuk Converter with Low Component Count," *2020 IEEE 9th Power India International Conference (PIICON)*, Sonepat, India, pp. 1-6, 2020. [CrossRef] [Google Scholar] [Publisher Link]

[53] Krishnapriya Vinod et al., "Battery Charger for Electric Vehicles with Modified Power Factor Corrected Bridgeless Converter," *2019 2nd International Conference on Intelligent Computing, Instrumentation and Control Technologies (ICICICT)*, Kannur, India, pp. 253-258, 2019. [CrossRef] [Google Scholar] [Publisher Link]

[54] Kanimozhi K et al., "Design and Laboratory Validation of a Grid-Interfaced Totem-Pole PFC Converter with PR Controller and Isolated Phase Modulated Converter for Solar-Powered Next-Gen EV Charging System," *CPSS Transactions on Power Electronics and Applications*, vol. 10, no. 1, pp. 32-43, 2025. [Google Scholar] [Publisher Link]

[55] Alakshyender Singh, Jitendra Gupta, and Bhim Singh, "Bridgeless Modified High-Step-Up Gain SEPIC PFC Converter based Charger for Light EVs Battery," *IEEE Transactions on Industry Applications*, vol. 59, no. 5, pp. 6155-6166, 2023. [CrossRef] [Google Scholar] [Publisher Link]

[56] Chao Wu, and Frede Blaabjerg, *Advanced Control of Power Electronic Systems-an Overview of Methods*, Academic Press, vol. 3, pp. 1-33, 2021. [CrossRef] [Google Scholar] [Publisher Link]

[57] Zhengyang Liu et al., "Design of GaN-based MHz Totem-Pole PFC Rectifier," *IEEE Journal of Emerging and Selected Topics in Power Electronics*, vol. 4, no. 3, pp. 799-807, 2016. [CrossRef] [Google Scholar] [Publisher Link]

[58] Hua Bai et al., "Design and Optimization of a 98%-Efficiency On-Board Level-2 Battery Charger using E-Mode GaN HEMTs for Electric Vehicles," *SAE International Journal of Alternative Powertrains*, vol. 5, no. 1, pp. 205-215, 2016. [CrossRef] [Google Scholar] [Publisher Link]

[59] TOSHIBA, Evolution Devices Power for Semiconductors Application of Fields Expandin, Toshiba, vol. 4, pp. 1-4, 2008. [Online]. Available: https://toshiba.semicon-storage.com/content/dam/toshiba-ss-v3/master/en/company/technical-review/pdf/technical-review-4_e.pdf

[60] Masoud Beheshti, "Wide-Bandgap Semiconductors: Performance and Benefits of GaN Versus SiC," *Texas Instruments*, 2020. [Google Scholar]

[61] José Millán et al., "A Survey of Wide Bandgap Power Semiconductor Devices," *IEEE Transactions on Power Electronics*, vol. 29, no. 5, pp. 2155-2163, 2014. [CrossRef] [Google Scholar] [Publisher Link]

[62] Jiajun Zhou et al., "Recent Advances in Device-Level Thermal Management Technologies for Wide Bandgap Semiconductor: A Review," *IEEE Transactions on Electron Devices*, vol. 72, no. 6, pp. 2769-2782, 2025. [CrossRef] [Google Scholar] [Publisher Link]

[63] Yujin Yang et al., "High Frequency and High Power Density Bipolar DC-DC Converter with GaN HEMT," *Energy Reports*, vol. 9, pp. 617-624, 2023. [CrossRef] [Google Scholar] [Publisher Link]

[64] Matteo Buffolo et al., "Review and Outlook on GaN and SiC Power Devices: Industrial State-of-the-Art, Applications, and Perspectives," *IEEE Transactions on Electron Devices*, vol. 71, no. 3, pp. 1344-1353, 2024. [CrossRef] [Google Scholar] [Publisher Link]

[65] SAE International, J3400_202409 - North American Charging System (NACS) for Electric Vehicles, 2024. [CrossRef] [Publisher Link]